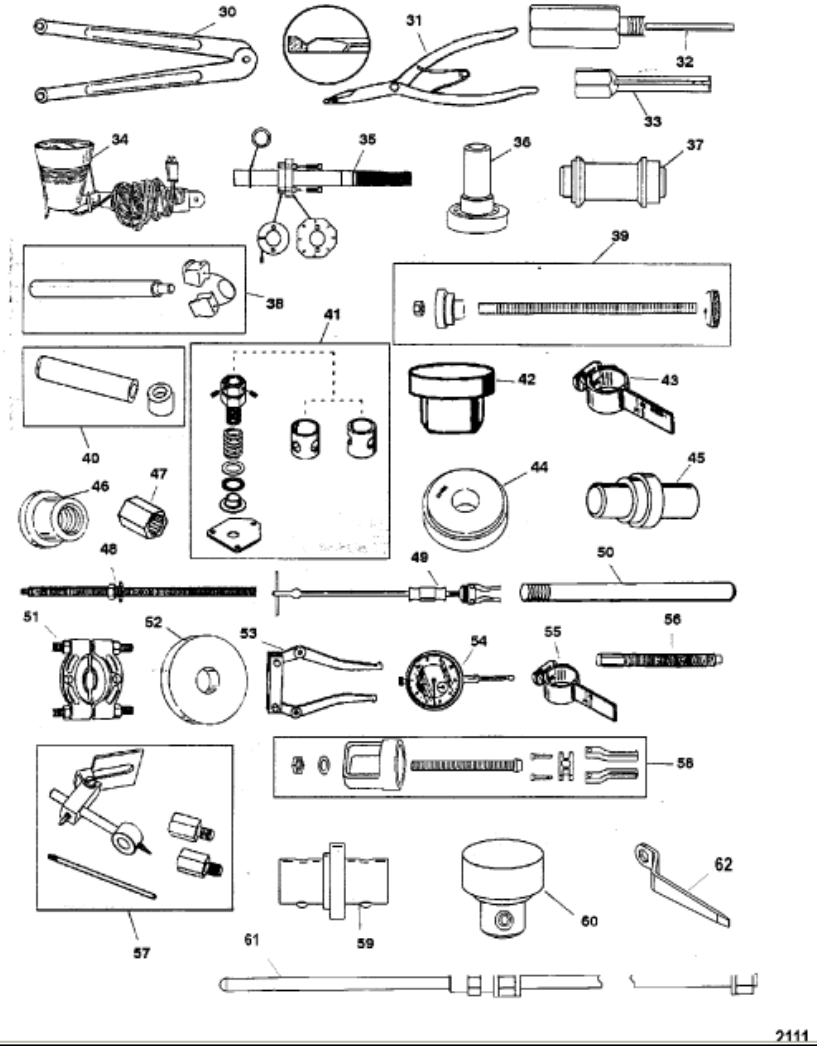

Parts List

Ref	Class	Part	Description	Qty	Comment	Footnote
30	91	74951	SPANNER WRENCH	1		
31		NSS	NOT SOLD SEPARATE, Lock-Ring	1		
32		NSS	NOT SOLD SEPARATE, Expanding	1		
33		NSS	NOT SOLD SEPARATE, Collet (Sn	1		
34	91	63209	HEAT LAMP	1		
35	91	12349A 2	PINION GEAR LOCATION TOOL, I	1		
36	91	13945	BEARING INSTALLATION TOOL	1		
37	91	13949	OIL SEAL DRIVER	1		
38	91	14308T02	BEARING RACE TOOL	1		
39	91	14309T02	BEARING INSTALLATION	1		
40	91	14310T 1	WEAR SLEEVE INSTALLATION T	1		
41	91	14311A 2	BEARING, Pre-Load Tool	1		
42	91	15755T	MANDREL	1		
43	91	19660 1	BACKLASH INDICATOR TOOL	1		
44	91	31106T	MANDREL	1		
45	91	31108T	OIL SEAL DRIVER	1		
46	91	36569T	MANDREL	1		
47	91	804776A 1	DRIVESHAFT HOLDING TOOL	1		
48	91	31229	SHAFT	1		
49	91	34569A 1	SLIDE HAMMER	1		
50	91	37323	DRIVER ROD	1		
51	91	37241	PULLER PLATE	1		
52	91	37350T	MANDREL	1		
53	91	46086A 1	PULLER JAWS	1		
54	91	58222A 1	DIAL INDICATOR KIT	1		
55	91	78473	BACKLASH INDICATOR TOOL	1		
56	91	85716	PULLER BOLT	1		
57	91	83155	ADAPTER KIT	1		
58	91	83165T	PULLER ASSEMBLY	1		
59	91	856875A 1	BEARING INSTALLATION TOOL	1		
60	91	877321A 1	BEARING INSTALLATION TOOL	1		
61	91	881239A 1	EMISSIONS PROBE (Bodensee)	1		
62	91	880177	SCRENCH, (10mm)	1		